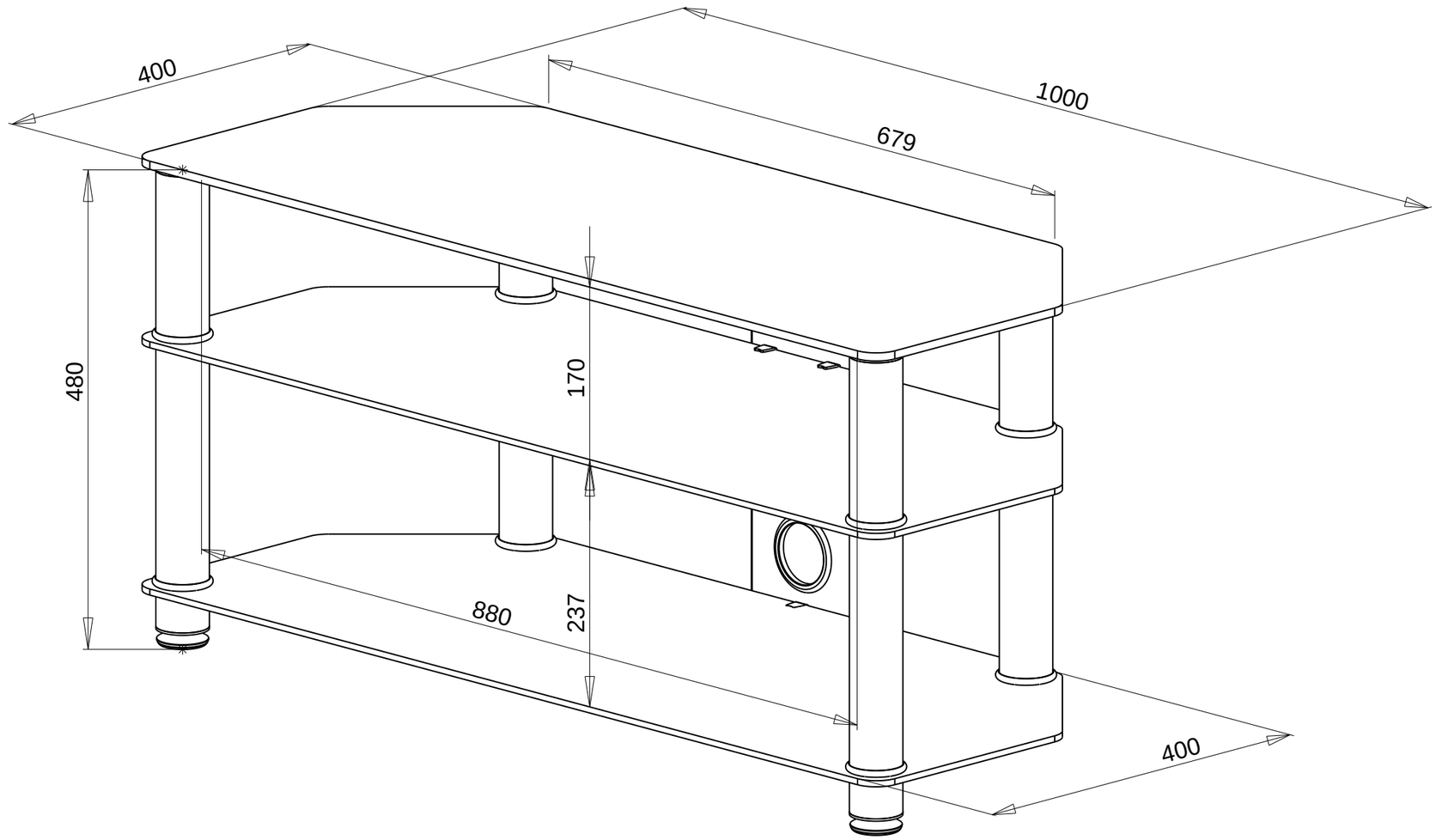

filer AT-317-BP